Allplan Questions

Question 1

1. When we change the diameter of a rebar into curved shapes, for example from 10mm to 24mm, the concrete cover is not maintained. Unlike with linear rebar's.

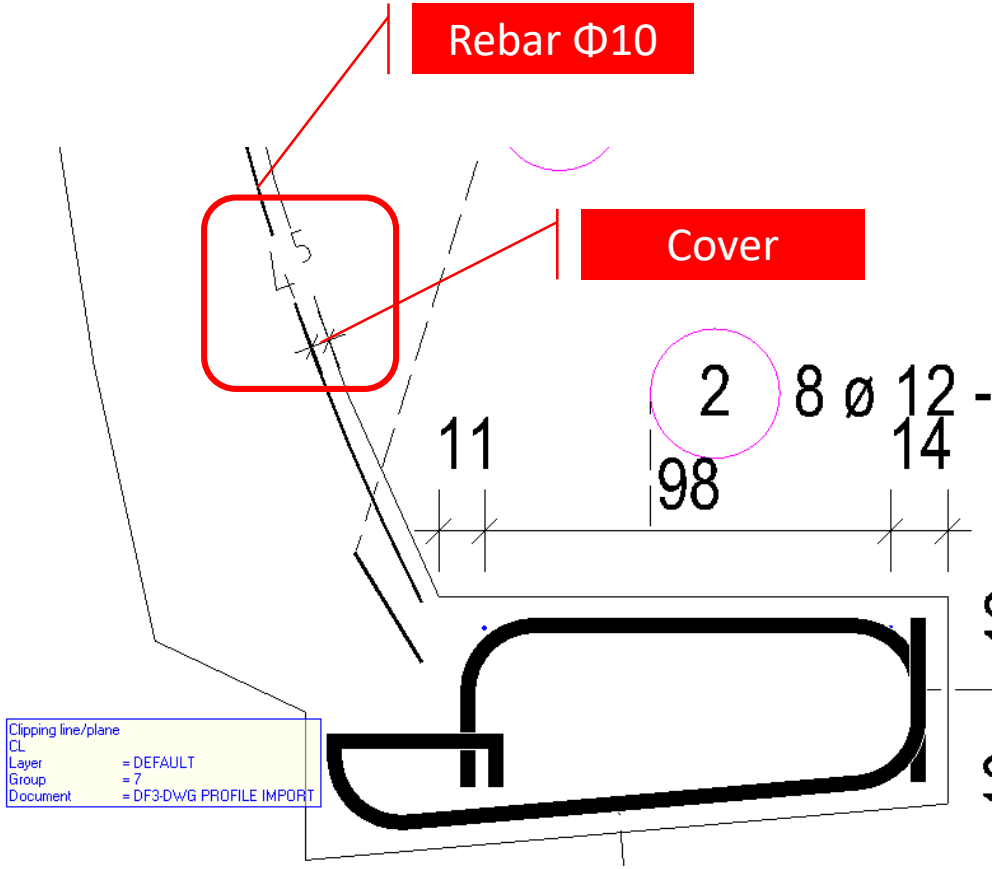

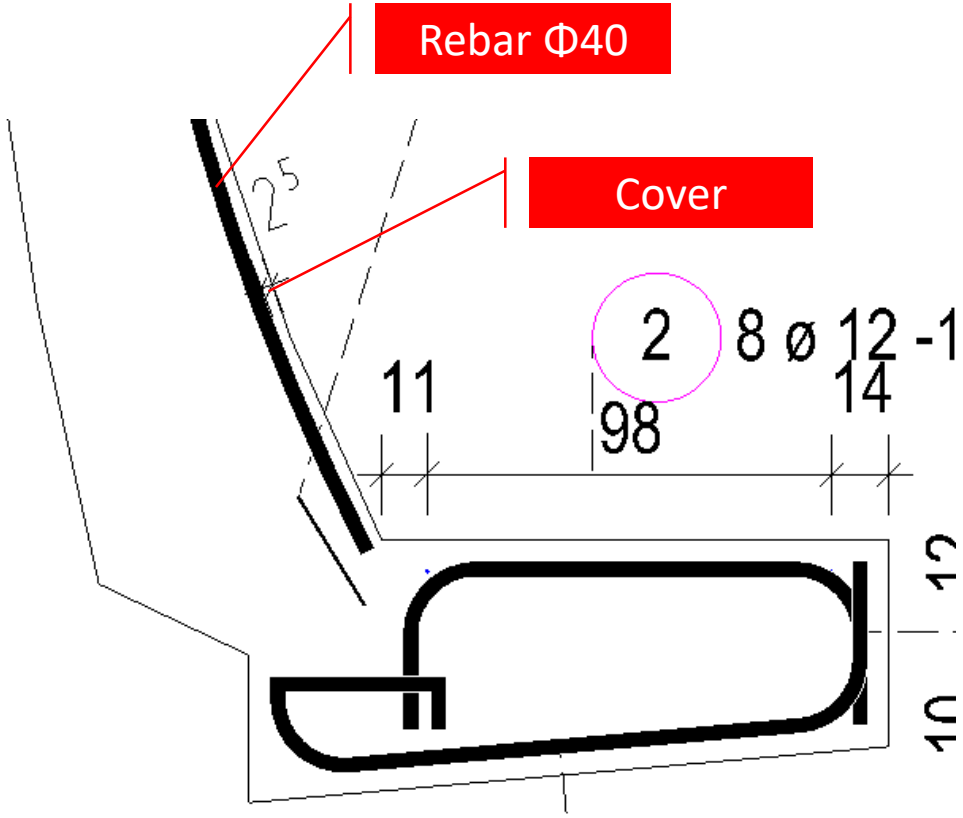

Question 2

2. How can we lengthen a curved rebar?

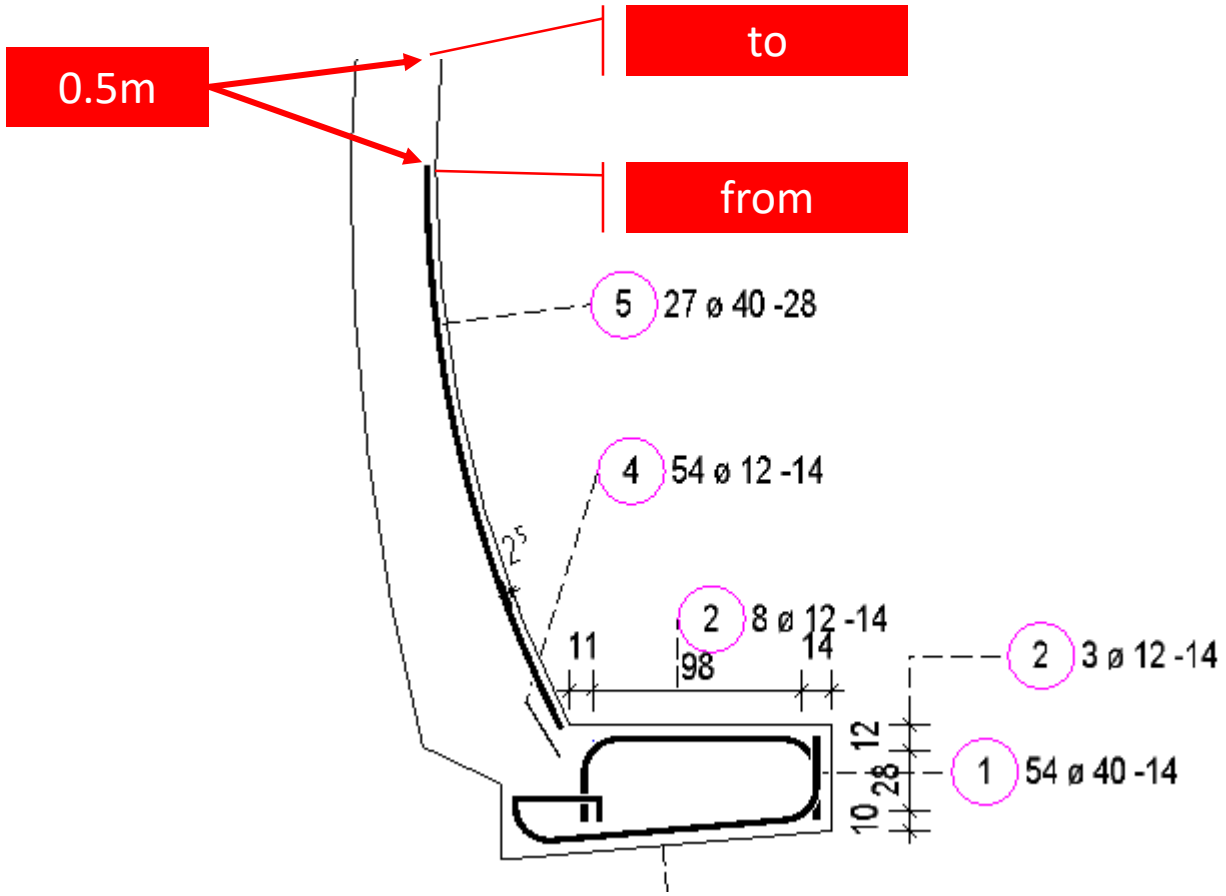

Question 5

5. Is there any way to unfold a curved model or to correlate it with an orthogonal geometry? We want the following result, in which appears the unfolding of a tunnel, reinforced either with meshes, or with group of rebar's.

Tunnel

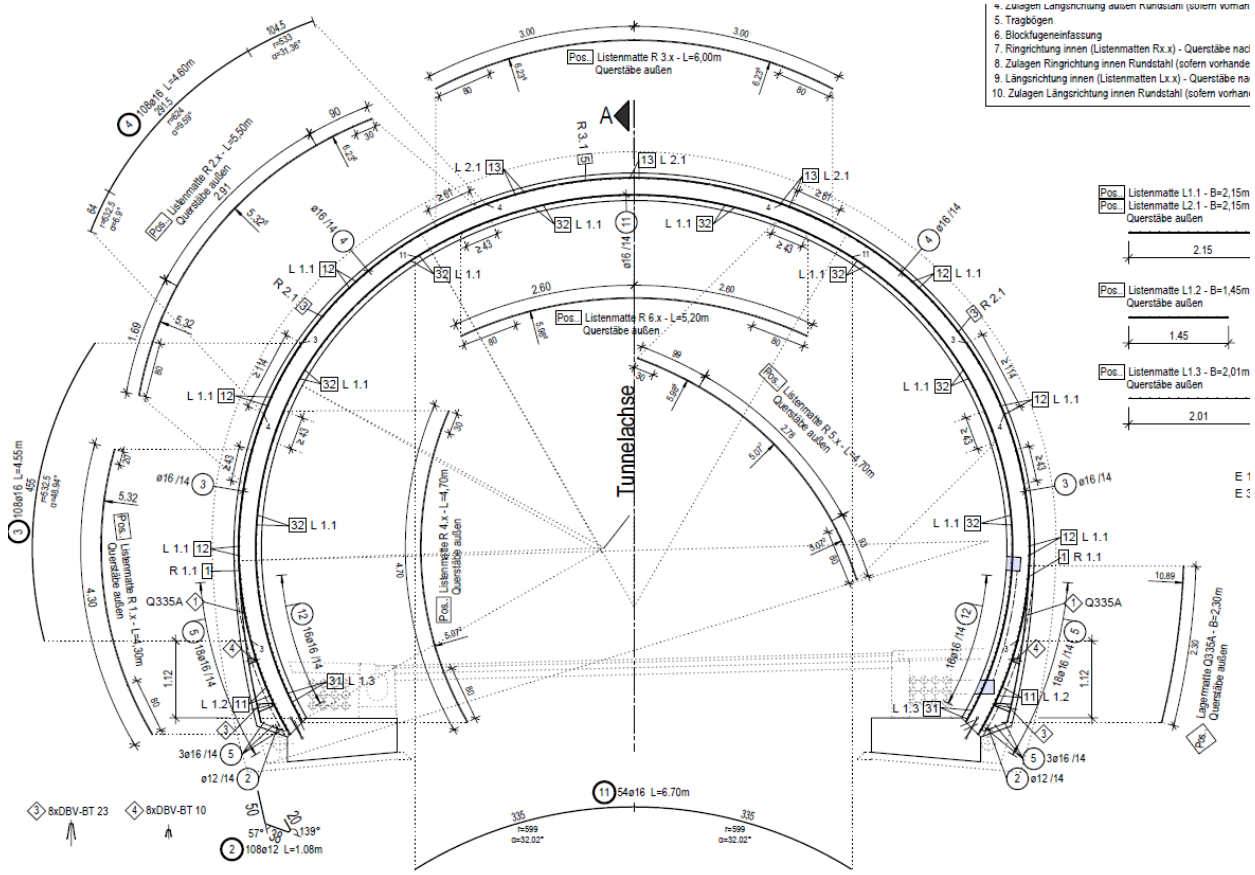

Orthogonal unfolding

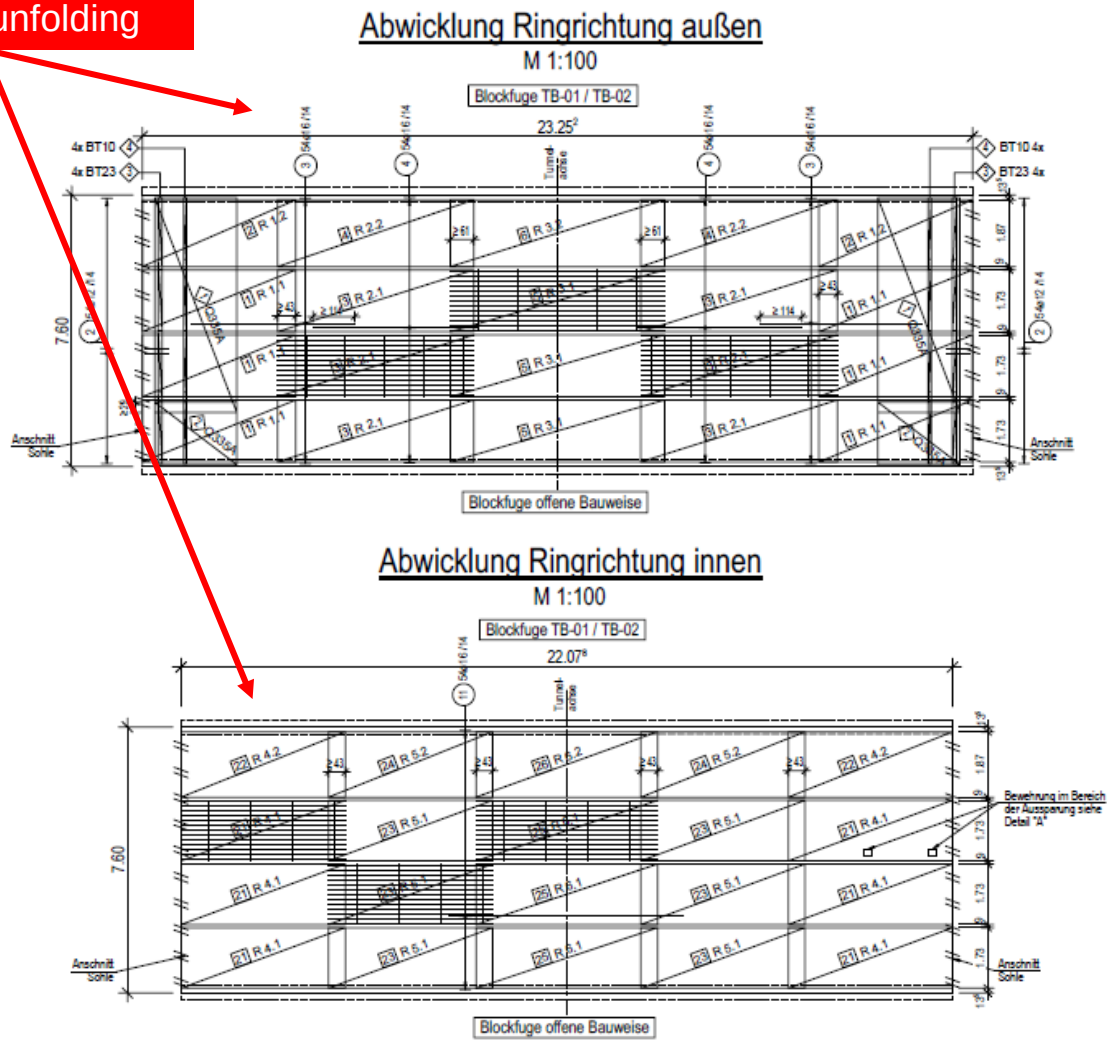

Question 13
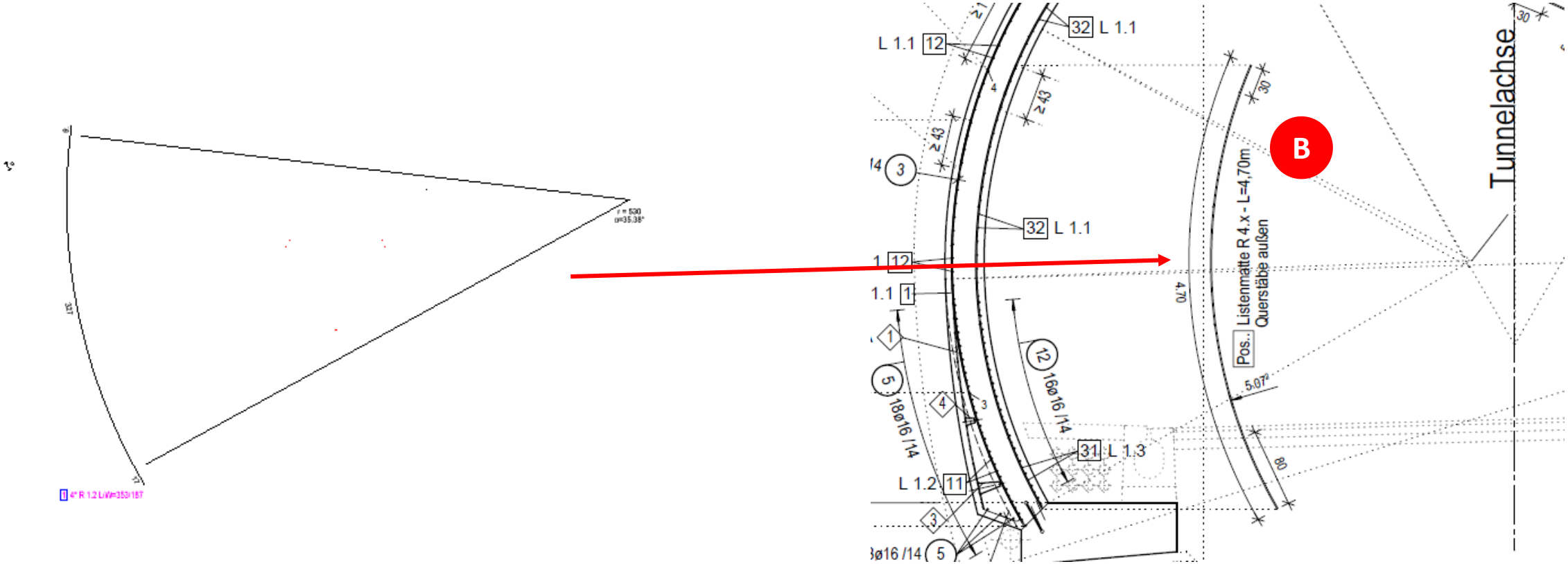
13. How can we edit the mesh formatting in a full schema? We want the B result.